CEMENT BOND LOG
GAMMA RAY
CCL

IPS

Company	KERR-McGEE OIL & GAS
Well	PIONEER 9-11
Field	WATTENBERG
County	WELD
State	CO

Company KERR-McGEE OIL & GAS
Well PIONEER 9-11
Field WATTENBERG
County WELD State CO
Location: API #: 05-123-27039
SW SE
SEC 11 TWP 2N RGE 65W
Other Services

Permanent Datum GL Elevation 4861
Log Measured From KB 20'
Drilling Measured From KB

Elevation
K.B. 4881
D.F. 4880
G.L. 4861

Date	1-28-2013
Run Number	ONE
Depth Driller	8060
Depth Logger	4200
Bottom Logged Interval	4200
Top Log Interval	SURFACE
Open Hole Size	7 7/8"
Type Fluid	WATER
Density / Viscosity	1.0
Max. Recorded Temp.	148
Estimated Cement Top	62
Time Well Ready	
Time Logger on Bottom	
Equipment Number	7770
Location	GREELEY
Recorded By	K.BRABEC
Witnessed By	B.SMITH

Borehole Record				Tubing Record			
Run Number	Bit	From	To	Size	Weight	From	To
ONE	12 1/4"	0	820				
TWO	7 7/8"	820	8060				

Casing Record	Size	Wgt/Ft	Top	Bottom
Surface String	8.63	24#	0	820
Prot. String				
Production String	4.5	11.60#	0	TD
Liner				

<<< Fold Here >>>

All interpretations are opinions based on inferences from electrical or other measurements and we cannot and do not guarantee the accuracy or correctness of any interpretation, and we shall not, except in the case of gross or willful negligence on our part, be liable or responsible for any loss, costs, damages, or expenses incurred or sustained by anyone resulting from any interpretation made by any of our officers, agents or employees. These interpretations are also subject to our general terms and conditions set out in our current Price Schedule.

Comments

RAN C.B.L. TO VERIFY CEMENT TOP.

THANK YOU FOR USING I.P.S.

Sensor	Offset (ft)
HEADVOLT	14.92
IntTemp	13.50
WVF3FT	10.25
WVFCAL	10.25
WVFS1	10.25
WVFS2	10.25
WVFS3	10.25
WVFS4	10.25
WVFS5	10.25
WVFS6	10.25
WVFS7	10.25
WVFS8	10.25
WVF5FT	9.25
CCL	5.30
GR	2.56

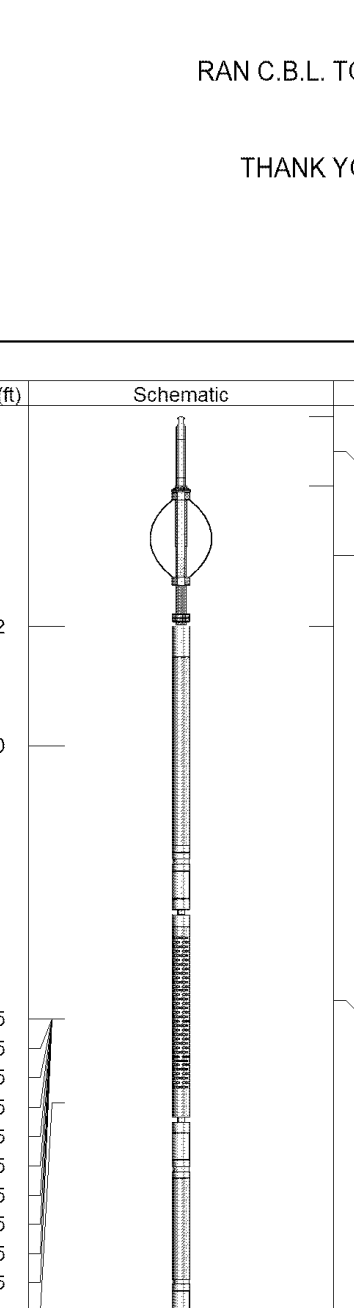

Description	Len (ft)	OD (in)	Wt (lb)
STD-Standard (STNDRD) Standard Cable Head	0.83	1.44	1.00
Probe	1.67	2.75	40.00
RBT-Probe (Base) Probe Radii Bond Tool with Digital Telemetry	8.92	2.75	90.00
GR-Probe (275) Probe 2.75"	4.33	2.75	30.00
Probe	1.67	2.75	40.00

Dataset: pioneer 9-11.db: field/well/run1/pass2
Total Length: 17.42 ft
Total Weight: 201.00 lb
O.D. 2.75 in

Database File: pioneer 9-11.db
Dataset Pathname: pass2
Presentation Format: djbasin
Dataset Creation: Mon Jan 28 07:04:44 2013 by Log Std Casedhole 09061
Charted by: Depth in Feet scaled 1:240

200	TT (usec)	800	-9 CCL 1	0	AMP (mV)	100	200 VDL	1200
30	GR (GAPI)	130		0	AMPx5 (mV)	20		
130	GR (GAPI)	230			IntTemp (degF)			

IPS

Company	KERR-McGEE OIL & GAS
Well	PIONEER 9-11
Field	WATTENBERG
County	WELD
State	CO