HALLIBURTON

CEMENT BOND LOG

SCALE: 5"=100'

Company	EnCana Oil & Gas (USA) Inc.
Well	DOWDY 8-2-10
Field	WATTENBERG
County	WELD
State	CO

Company EnCana Oil & Gas (USA) Inc.
Well DOWDY 8-2-10
Field WATTENBERG
County WELD State CO

API No.: 05-123-36044000 Serv #:
Location: SHL: 1114' FNL & 1102' FEL NENE
BHL: 1400' FNL & 50' FEL SENE

Other Services
NONE

Sec: 10 Twp: 2N Rge: 65W

Permanent Datum	GL	Elevation 4858	Elevation	
Log Measured From	KB , 13 Ft. above perm. datum		K.B.	4871
Drilling Measured From	KB		D.F.	4871
			G.L.	4858

Date @ Time Logged	13-NOV-2012	Type Fluid in Hole	2%KCL
Run No.	ONE	Density of Fluid	8.4
Depth - Driller	7881	Fluid Level	SURFACE
Depth - Logger	7813	Cement Top Est. Logged	3470
Bottom - Logged Interval	7801	Equipment / Location	11014931 / BRIGHTON
Top - Log Interval	3050	Recorded by	TROY SCHROCK
Max. Recorded Temp.	231	Witnessed by	MR. TOM MAJORS

CEMENTING DATA	Surface String	Protection String	Production String	Liner
Date / Time Cemented				
Primary / Squeeze				
Expected Compressive Strength	psi@ hrs	psi@ hrs	psi@ hrs	psi@ hrs
Cement Volume				
Cement Type / Weight	/	/	/	/
Formulation				
Mud Type / Mud Wgt.	/	/	/	/

Borehole Record			Casing & Tubing Record			
Run Number	Bit	From	To	Size	Weight	From	To
				8.625	24	SURFACE	900
				4.5	11.6	SURFACE	7868

<<< Fold Here >>>

HALLIBURTON DOES NOT GUARANTEE THE ACCURACY OF ANY INTERPRETATION OF THE LOG DATA, CONVERSION OF LOG DATA TO PHYSICAL ROCK PARAMETERS OR RECOMMENDATIONS WHICH MAY BE GIVEN BY HALLIBURTON PERSONNEL OR WHCIH APPEAR ON THE LOG OR IN ANY OTHER FORM. ANY USER OF SUCH DATA, INTERPRETATIONS, CONVERSIONS, OR RECOMMENDATIONS AGREES THAT HALLIBURTON IS NOT RESPONSIBLE EXCEPT WHERE DUE TO GROSS NEGLIGENCE OR WILLFUL MISCONDUCT, FOR ANY LOSS, DAMAGES, OR EXPENSES RESULTING FROM THE USE THEREOF.

Comments

BLANKET VALUE OF: 241

MARKER JOINT @6864-6884

CORRELATED TO: PIONEER ENERGY SERVICES HRI DATED: OCT. 24, 2012

THANK YOU FOR CHOOSING HALLIBURTON ENERGY SERVICES.
YOUR CREW TODAY: T. SCHROCK, B. LAWLEY, C. KLIENSASSER, D. PALMER

HALLIBURTON

MAIN PASS

SCALE: 5"=100'

Database File:	encana_dowdy_8-2-10.db
Dataset Pathname:	CBL/pass9
Presentation Format:	1katcbl
Dataset Creation:	Tue Nov 13 08:59:28 2012 by Log Halliburton Casedho
Charted by:	Depth in Feet scaled 1:240

9	Collar Locator	-1	0 Amplified Amplitude (mV) 10	200 Variable Density 1200
0	Gamma Ray (GAPI)	300	0 Amplitude (mV) 100	

HALLIBURTON

MAIN PASS

SCALE: 5"=100'

HALLIBURTON

REPEAT PASS

SCALE: 5"=100'

Database File: encana_dowdy_8-2-10.db
Dataset Pathname: CBL/pass8
Presentation Format: 1katcbl
Dataset Creation: Tue Nov 13 08:53:34 2012 by Log Halliburton Casedho
Charted by: Depth in Feet scaled 1:240

9	Collar Locator	-1	0 Amplified Amplitude (mV) 10	200 Variable Density 1200
0	Gamma Ray (GAPI)	300	0 Amplitude (mV) 100	

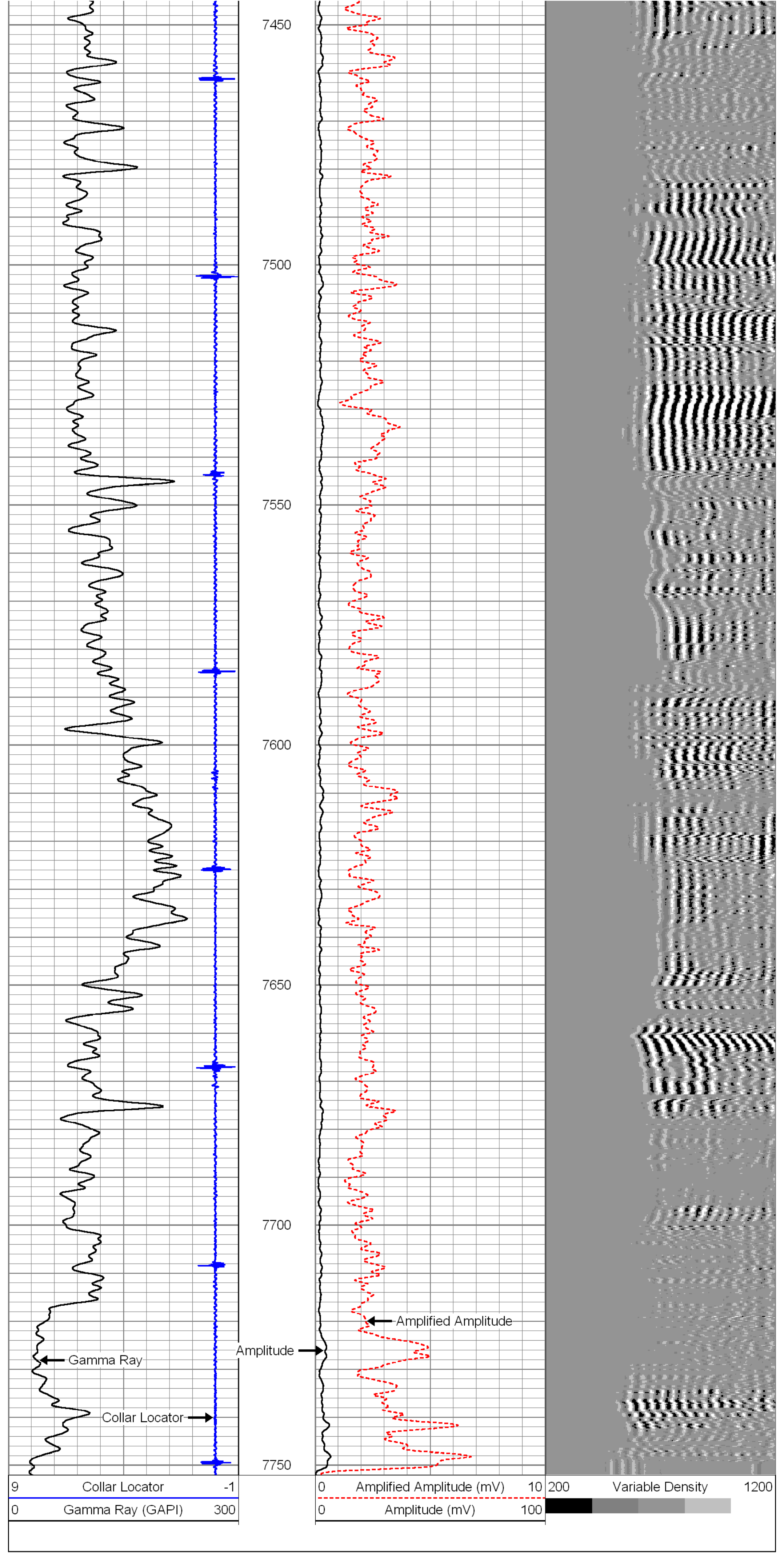

9	Collar Locator	-1	0 Amplified Amplitude (mV) 10	200 Variable Density 1200
0	Gamma Ray (GAPI)	300	0 Amplitude (mV) 100	

HALLIBURTON

REPEAT PASS

SCALE: 5"=100'

HALLIBURTON

FREE PIPE PASS

SCALE: 5"=100'

Database File: encana_dowdy_8-2-10.db
Dataset Pathname: CBL/pass5
Presentation Format: 1katcbl
Dataset Creation: Tue Nov 13 08:22:34 2012 by Log Halliburton Casedho
Charted by: Depth in Feet scaled 1:240

9	Collar Locator	-1	0 Amplified Amplitude (mV) 10	200 Variable Density 1200
0	Gamma Ray (GAPI)	300	0 Amplitude (mV) 100	

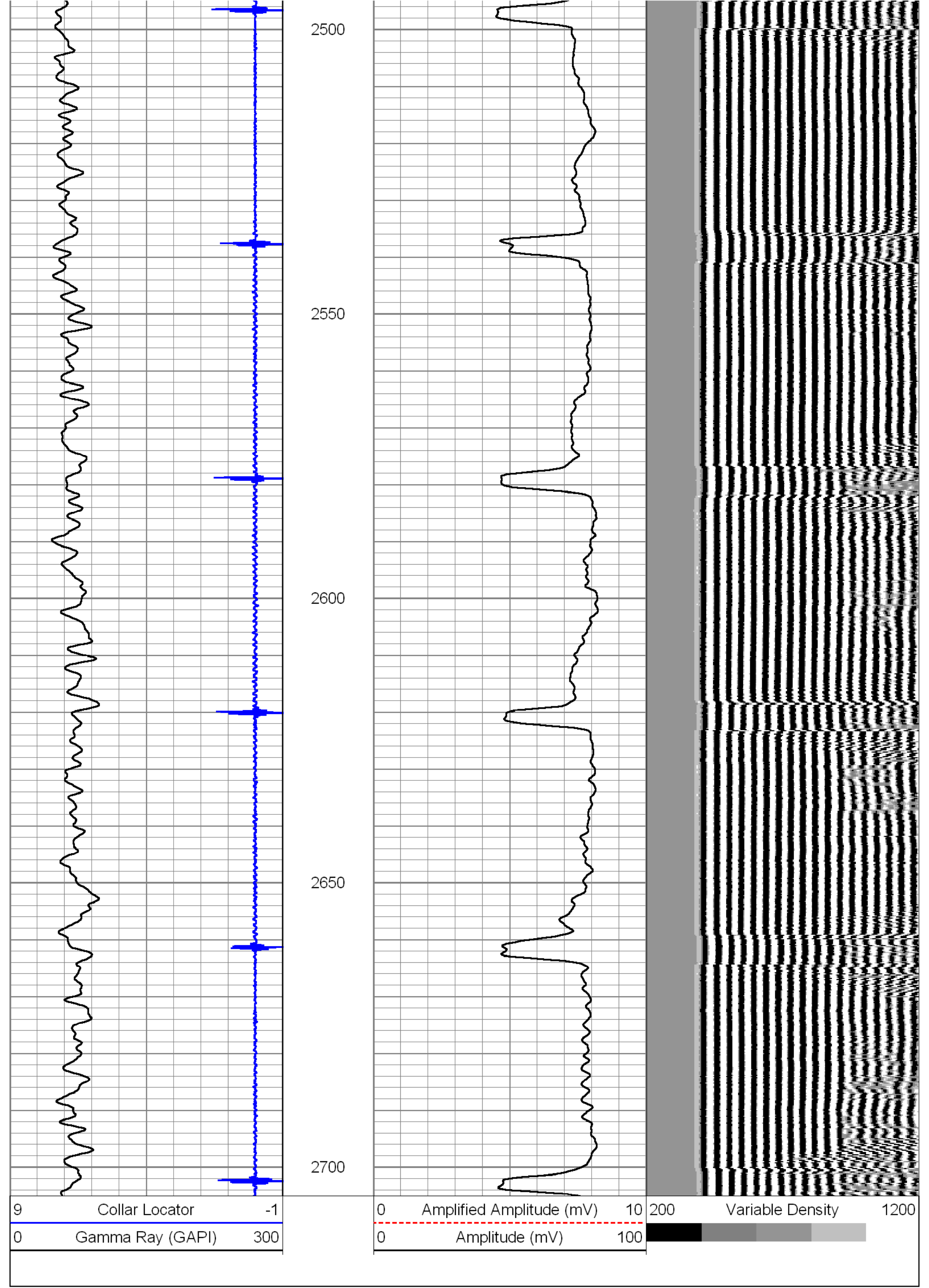

9	Collar Locator	-1	0 Amplified Amplitude (mV) 10	200 Variable Density 1200
0	Gamma Ray (GAPI)	300	0 Amplitude (mV) 100	

HALLIBURTON

FREE PIPE PASS

SCALE: 5"=100'

Calibration Report

Database File: encana_dowdy_8-2-10.db
Dataset Pathname: CBL/pass8
Dataset Creation: Tue Nov 13 08:53:34 2012 by Log Halliburton Casedho

Temperature Calibration Report

Serial Number: Tit1.3_02
Tool Model: Titan
Performed: Fri Jan 04 06:55:24 2002

	Reference		Reading	
Low Reference:	0.00	degF	0.00	cps
High Reference:	1.00	degF	1.00	cps

Gain: 0.10
Offset: 0.00
Delta Spacing 2

Gamma Ray Calibration Report

Type / Serial: Probe / 275

	Counts/Sec.	Gain	Offset	Jig	Units
SHOP CALIBRATION	Mon Nov 12 15:42:37 2012				
Background	56.8				cps
Calibrator	258.3				cps
		1.1961			GAPI/cps
PRIMARY VERIFICATION	Mon Nov 12 15:46:29 2012				
Background	68.3				cps
Calibrator	311.8				cps
Difference				243.5	GAPI
BEFORE SURVEY VERIFICATION					
Background	0.0				cps
Calibrator	0.0				cps
Difference				0.0	GAPI
AFTER SURVEY VERIFICATION					
Background	0.0				cps
Calibrator	0.0				cps
Difference				0.0	GAPI

Cement Bond Log Calibration Report

Serial Number: 275
Tool Model: Probe
Performed: Tue Nov 13 08:20:09 2012

Depth: 2735.82 ft
Casing Diameter: 5.5 in

	3' Spacing	5' Spacing	
Signal Zero:	0.1	0.1	mV
Calibrated Amplitude:	82	82	mV
Reading at Signal Zero:	-0.000537109	0.00285645	V
Reading in Free Pipe:	0.306152	0.296777	V
Gain:	267.045	278.646	
Offset:	0.243433	-0.695938	

Sensor	Offset (ft)	Schematic	Description	Len (ft)	OD (in)	Wt (lb)
		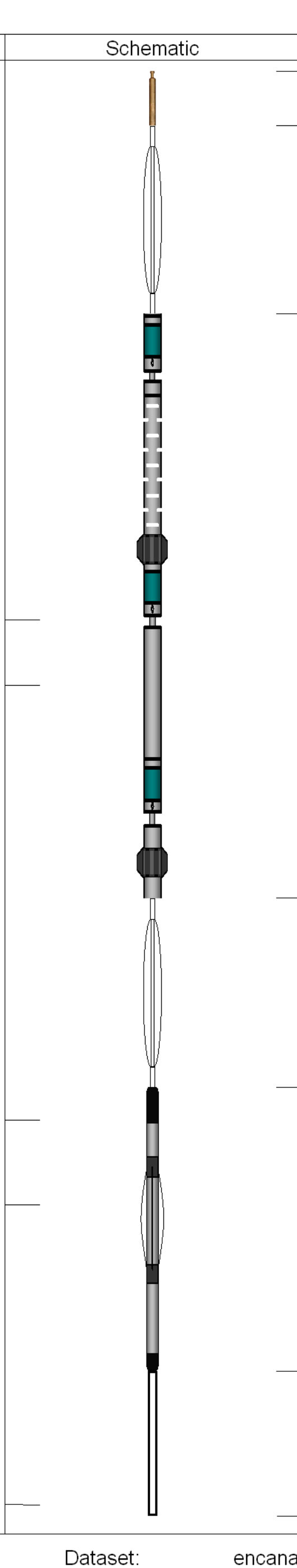	1_CABLEHEAD 1"OD CABLE HEAD	0.83	1.00	3.00
			CENT-Probe (PT_MONO2) Probe 2 3/4 Centralizer	2.88	2.75	35.00
WVF3	13.68		CBL-Probe (275) Probe 2.75" Dual Receiver Bond	8.92	2.75	60.00
WVF5	12.68					
			CENT-Probe (PT_MONO2) Probe 2 3/4 Centralizer	2.88	2.75	35.00
CCL	6.04					
GR	4.75		GR-Probe (275) Probe 2.75" 4 Channel Pulse	4.33	2.75	30.00
			TEMP-Titan (Tit1.3_02) Titan Temp 1.3875	2.21	1.39	10.00
TEMP	0.17					

Dataset: encana_dowdy_8-2-10.db: FIELD/WELL/CBL/pass9
Total Length: 22.06 ft
Total Weight: 173.00 lb
O.D. 2.75 in

Company	EnCana Oil & Gas (USA) Inc.		
Well	DOWDY 8-2-10		
Field	WATTENBERG		
County	WELD	State	CO

HALLIBURTON

CEMENT BOND LOG

SCALE: 5"=100'