AXIA ENERGY
COMPLETION PIT
BULLDOG #5-31H-790
SITE CIVIL CONSTRUCTION DOCUMENTS
LOCATED IN SECTION 5, TOWNSHIP 7 NORTH, RANGE 90 WEST OF THE 6TH P.M.
MOFFAT COUNTY, STATE OF COLORADO

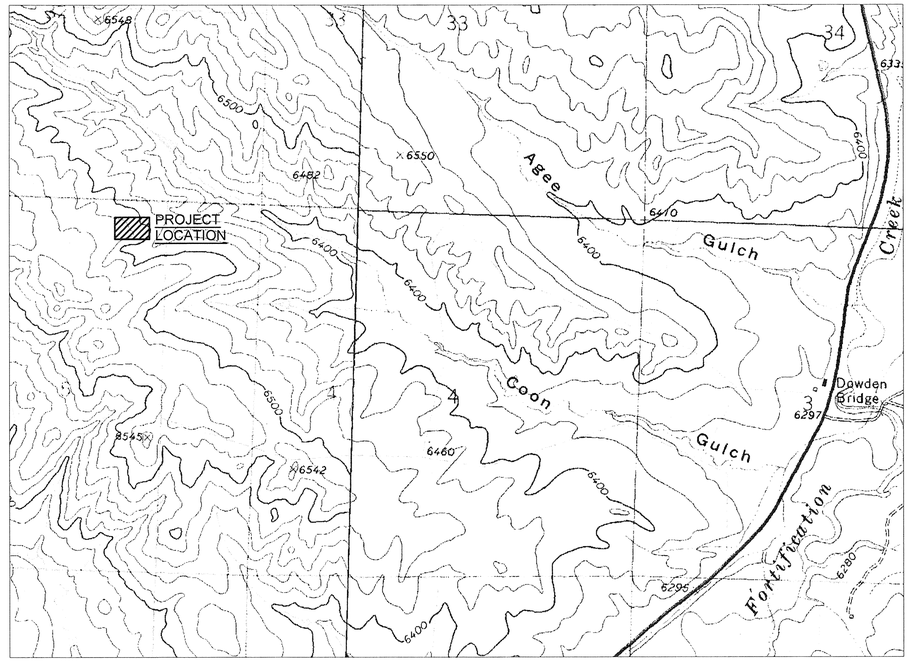

GENERAL NOTES

1. ALL WORK WITHIN PUBLIC RIGHTS-OF-WAY AND/OR EASEMENT AND ALL ON-SITE UTILITY WORK SHALL CONFORM TO THE TECHNICAL SPECIFICATIONS AND DESIGN CRITERIA FOR PUBLIC IMPROVEMENT PROJECTS OF MOFFAT COUNTY AND THE GRANTOR OF THE EASEMENT.
2. ALL MATERIALS AND WORKMANSHIP SHALL BE IN CONFORMANCE WITH THE LATEST STANDARDS AND SPECIFICATIONS OF THE APPROPRIATE GOVERNING AGENCY. THE CONTRACTOR SHALL HAVE IN HIS POSSESSION AT ALL TIMES (1) SIGNED COPY OF THE PLANS, STANDARDS, AND SPECIFICATIONS AS APPROVED BY THE APPROPRIATE GOVERNING AGENCY. THE CONTRACTOR SHALL OBTAIN WRITTEN APPROVAL FOR ANY VARIANCE TO THE ABOVE DOCUMENTS.
3. THE CONTRACTOR SHALL OBTAIN, AT HIS OWN EXPENSE, ALL APPLICABLE CODES, LICENSES, STANDARDS, PERMITS, BONDS, ETC. WHICH ARE NECESSARY TO PERFORM THE PROPOSED WORK.
4. THE EXISTING UTILITY LOCATIONS SHOWN ON THE PLANS ARE APPROXIMATE AND MAY NOT INCLUDE ALL LINES PRESENT. THE CONTRACTOR WILL BE RESPONSIBLE FOR CALLING THE UTILITY NOTIFICATION CENTER OF COLORADO AT 811 AND COORDINATING FIELD LOCATIONS OF EXISTING UNDERGROUND UTILITIES PRIOR TO BEGINNING GRADING AND UTILITY WORK.
5. LOCATIONS AND ELEVATIONS OF EXISTING IMPROVEMENTS TO BE MET (OR AVOIDED) BY WORK TO BE DONE SHALL BE CONFIRMED BY THE CONTRACTOR THROUGH FIELD EXPLORATIONS PRIOR TO CONSTRUCTION. CONTRACTOR SHALL REPORT TO THE ENGINEER ANY DISCREPANCIES BETWEEN HIS MEASUREMENTS AND THESE PLANS.
6. ANY CONSTRUCTION DEBRIS OR MUD DROPPED INTO MANHOLES, INLETS, PIPES OR TRACKED ONTO EXISTING ROADWAYS SHALL BE REMOVED IMMEDIATELY BY THE CONTRACTOR. THE CONTRACTOR SHALL REPAIR ANY EXCAVATIONS OR PAVEMENT FAILURES CAUSED BY HIS CONSTRUCTION. THE CONTRACTOR SHALL PROPERLY BARRICADE THE CONSTRUCTION SITE UNTIL CONSTRUCTION IS COMPLETE.
7. PRIOR TO BEGINNING THE WORK, THE CONTRACTOR SHALL OBTAIN ANY WRITTEN AGREEMENTS FOR INGRESS AND EGRESS TO THE WORK FORM ADJACENT PRIVATE PROPERTY OWNERS. ACCESS TO ANY ADJACENT PRIVATE PROPERTY SHALL BE MAINTAINED THROUGHOUT THE CONSTRUCTION PERIOD.
8. THE CONTRACTOR SHALL BE RESPONSIBLE FOR OBTAINING ALL PERMITS NOT OBTAINED BY THE OWNER OR OWNER'S REPRESENTATIVES AND PAY ALL FEES AS REQUIRED BY THE CONSTRUCTION COVERED IN THESE PLANS.
9. EXCEPT FOR MATERIALS DESIGNED TO BE RELOCATED ON THIS PLAN, ALL OTHER CONSTRUCTION MATERIALS SHALL BE NEW.
10. NO WORK SHALL BE BACKFILLED (INCLUDING BEDDING MATERIAL ABOVE THE SPRING LINE OF THE PIPE) UNTIL THE CONSTRUCTION HAS BEEN INSPECTED AND APPROVED FOR BACKFILLING BY THE APPROPRIATE GOVERNING AGENCY.
11. ALL WORK AND MATERIALS WILL BE SUBJECT TO INSPECTION AND APPROVAL BY THE OWNER OR THE OWNERS REPRESENTATIVE.
12. SHOP DRAWINGS AND MATERIAL SPECIFICATIONS SHALL BE SUBMITTED TO OWNER/ENGINEER FOR REVIEW AND APPROVAL PRIOR TO PLACEMENT OF MATERIAL.
13. ALL WORK SHALL CONFORM TO ALL LOCAL, STATE, AND FEDERAL APPLICABLE LAWS AND REGULATIONS.
14. ALL ESTIMATES OF QUANTITIES ARE FOR INFORMATIONAL PURPOSES ONLY. CONTRACTOR AND SUBCONTRACTORS SHALL BE RESPONSIBLE FOR DETERMINING ALL QUANTITIES. CONTRACTOR SHALL PROVIDE ALL WORK AND MATERIALS AS SHOWN ON THESE PLANS.
15. THE CONTRACTOR SHALL BE RESPONSIBLE FOR JOB SITE SAFETY OF HIS OWN PERSONNEL, ALL VISITORS TO THE SITE, AND THE GENERAL PUBLIC INCLUDING, BUT NOT LIMITED TO, TRENCH EXCAVATION AND SHORINGS, TRAFFIC CONTROL, AND SECURITY NOT LIMITED TO NORMAL WORKING HOURS.
16. THE CONTRACTOR SHALL BE RESPONSIBLE FOR REPAIRING ALL EXISTING FEATURES TO REMAIN THAT ARE DAMAGED DURING CONSTRUCTION ACTIVITIES TO EQUAL OR BETTER CONDITION, AT HIS OWN EXPENSE.
17. CONTRACTOR SHALL COORDINATE THE INSTALLATION OF ALL SITE IMPROVEMENTS (INCLUDING BUT NOT LIMITED TO: UTILITIES, STRUCTURES, PAVING, LANDSCAPING, ETC.) SUCH THAT NO DAMAGE IS DONE TO SITE IMPROVEMENTS (I.E.: SAWCUTTING NEW PAVEMENT). SITE IMPROVEMENTS DAMAGED DURING CONSTRUCTION SHALL BE REPAIRED OR REPLACED TO THE SATISFACTION OF THE OWNER AT NO ADDITIONAL COST TO THE OWNER.
18. IF, DURING THE CONSTRUCTION PROCESS, CONDITIONS ARE ENCOUNTERED WHICH COULD INDICATE THAT A PRIOR UNIDENTIFIED SITUATION IS PRESENT, THE CONTRACTOR SHALL CONTACT THE ENGINEER IMMEDIATELY.
19. THE CONTRACTOR SHALL REMOVE ALL DEBRIS RESULTING FROM WORK UNDER THIS CONTRACT TO AN APPROVED DUMP SITE.
20. DIMENSIONS SHOWN ON THE PLANS ARE TO FACE OF CURB LINE IN CURBED AREA AND EXTERIOR FACE OF BUILDING, AND TO CENTERLINE OF UTILITIES, UNLESS OTHERWISE SPECIFIED.
21. USE ONLY DIMENSIONS PROVIDED ON THESE PLANS. DO NOT SCALE DRAWINGS. INFORM ENGINEER OF ANY DISCREPANCIES AND/OR MISSING INFORMATION.
22. THE CONTRACTOR SHALL BE RESPONSIBLE FOR MAINTAINING ACCESS TO ADJACENT PARCELS DURING ALL HOURS OF OPERATION FOR THE BUSINESSES LOCATED ON THOSE PARCELS.
23. CONTRACTOR TO OBTAIN TEMPORARY POWER, TELEPHONE AND WATER FOR THE SITE AS NEEDED.
24. CONTRACTOR MUST COORDINATE CONSTRUCTION WITH OWNER/ADJACENT PROPERTY OWNER'S CONSTRUCTION MANAGER.
25. THE CONTRACTOR SHALL OBTAIN A COPY OF THE STANDARD SPECIFICATIONS AND DETAILS OF ALL AGENCIES EXERCISING JURISDICTION OVER THIS PROJECT. A COPY OF THESE SPECIFICATIONS AND DETAILS SHALL BE MAINTAINED ON THE JOBSITE AT ALL TIMES. A COPY OF ALL APPLICABLE STANDARD DETAILS AND SPECIFICATIONS ARE INCORPORATED HEREIN BY REFERENCE.
26. THE CONTRACTOR SHALL BE RESPONSIBLE FOR KEEPING ADJACENT COUNTY ROADS FREE AND CLEAN OF ALL DEBRIS AND DIRT FROM THE JOB SITE.
27. THE GEOSYNTHETICS HAVE BEEN SELECTED TO MEET OR EXCEED THE REQUIREMENTS INDICATED ON DESIGN DRAWINGS AND IN SPECIFICATIONS. A TEXTURED PRIMARY LINER IS RECOMMENDED. PLACING TEXTURED SIDE DOWN WILL ENHANCE GEOSYNTHETIC ANCHORAGE ON THE STEEP SLOPES. ALTERNATES TO THE MATERIALS SPECIFIED ARE SELECTED SHALL BE APPROVED BY THE ENGINEER.
28. SINCE SITE-SPECIFIC DATA WAS NOT AVAILABLE, THE VALUE FOR THE FRICTION ANGLES BETWEEN GEOMEMBRANES AND SOIL/GEOMEMBRANE HAS BEEN ESTIMATED FROM LITERATURE GUIDANCE FROM WASTE CONTAINMENT SYSTEMS, WASTE STABILIZATION, AND LANDFILLS, SHARMA/LEWIS 1994 AND A STUDY DONE BY MARTIN ET. AL. [MARTIN, J.P., KOERNER R.M., AND WHITEY, J.E., "EXPERIMENTAL FRICTION EVALUATION OF SLIPPAGE BETWEEN GEOMEMBRANES, GEOTEXTILES AND SOILS," PROCEEDINGS OF THE INTERNATIONAL CONFERENCE ON GEOMEMBRANES, IFAI, 1984, PP. 191-196]. CONSERVATIVE VALUES FROM THE RANGES PROVIDED IN THE AFORE MENTIONED LITERATURE WAS USED DETERMINING ANCHOR TRENCH DIMENSIONS AND RUN OUT LENGTH.

GRADING

1. THE CONTRACTOR IS RESPONSIBLE FOR PROTECTION OF ALL PROPERTY CORNERS. ANY PROPERTY CORNERS DISTURBED OR DAMAGED BY GRADING ACTIVITIES SHALL BE RESET BY A PROFESSIONAL LAND SURVEYOR LICENSED IN THE STATE OF COLORADO, AT THE CONTRACTORS EXPENSE.
2. THE CONTOUR LINES SHOWN ARE TO FINISH GRADE FOR SURFACE OF ROADWAY, SURFACE OF POND, ETC. ALL SPOT ELEVATIONS SHOWN ARE TO FLOWLINE UNLESS OTHERWISE INDICATED. REFER TO TYPICAL SECTIONS FOR MULCH, SOD, PAVING, SLAB AND AGGREGATE BASE THICKNESS TO DEDUCT FOR GRADING LINE ELEVATIONS.
3. THE CONTRACTOR SHALL FINISH GRADE SLOPES AS SHOWN NO STEEPER THAN ONE FOOT VERTICAL IN THREE FEET HORIZONTAL UNLESS OTHERWISE SPECIFIED.
4. THE CONTRACTOR SHALL CLEAN OUT ALL EXISTING AND PROPOSED INLETS, PIPES AND MANHOLES OF DEBRIS AND SEDIMENT AT COMPLETION OF SITEWORK. THIS WORK SHALL BE DONE TO THE SATISFACTION OF THE OWNER.
5. CONTRACTOR SHALL COORDINATE TESTING ACTIVITIES WITH THE GEOTECHNICAL ENGINEER.
6. ALL GRADING, COMPACTION, AND PAVEMENT CONSTRUCTION WILL BE IN ACCORDANCE WITH RECOMMENDATIONS FROM A GEOTECHNICAL INVESTIGATION OBTAINED BY OWNER.

CONTACT LIST:

OWNER:
AXIA ENERGY
1430 LARMER STREET
SUITE 400
DENVER, CO 80202
PHONE: (720) 746-5212
CONTACT: JESS PEONIO

SURVEYOR:
UINTAH ENGINEERING & LAND SURVEYING
85 SO. 200 EAST
VERNAL, UTAH 84078
PHONE: (435) 789-1017
CONTACT: ZACH LEECH

ENGINEER:
OLSSON ASSOCIATES
826 21 1/2 ROAD
GRAND JUNCTION, CO 81505
PHONE: (970) 263-7800
CONTACT: WYATT POPP, PE

DEWATERING PERMITS

1. CONTRACTOR TO OBTAIN DEWATERING PERMIT FROM CDPHE PRIOR TO COMMENCING WORK. DISCHARGES SHALL BE MONITORED ACCORDING TO THE CONDITIONS OF THE CDPHE PERMIT.

SHEET INDEX

SHEET NUMBER	SHEET TITLE
1	COVER SHEET
2	LOCATION MAP
3	SITE PLAN
4	GRADING PLAN
5	POND SECTIONS
6	DRAINAGE PLAN
7	DETAILS
8	DETAILS
9	BIRD NETTING LAYOUT PLAN

EROSION & SEDIMENT CONTROL

1. THIS PROJECT REQUIRES A PERMIT FOR STORMWATER DISCHARGE ASSOCIATED WITH CONSTRUCTION ACTIVITY FROM THE COLORADO DEPARTMENT OF PUBLIC HEALTH AND ENVIRONMENT. CONTRACTOR TO COMMENCE WORK ON THIS SITE ONLY AFTER AN ACTIVE PERMIT NUMBER HAS BEEN OBTAINED FROM THE COLORADO DEPARTMENT OF PUBLIC HEALTH AND ENVIRONMENT.
2. THE CONTRACTOR SHALL INSTALL EROSION/SEDIMENTATION CONTROLS PRIOR TO ANY SITE PREPARATION WORK (E.G., CLEARING, GRUBBING, OR EXCAVATION).
3. THE PLACEMENT OF EROSION/SEDIMENTATION CONTROLS SHALL BE IN ACCORDANCE WITH THE STORMWATER POLLUTION PREVENTION PLAN PREPARED FOR THE PROJECT.
4. CONTRACTOR TO ADJUST EROSION CONTROL MEASURES AS NEEDED FOR VARIOUS PHASES OF WORK.
5. CONTRACTOR TO ENSURE THAT NO DIRT AND SEDIMENT IS TRACKED ONTO ADJACENT ROADWAYS AND WATERWAYS.
6. A GROUNDWATER DISCHARGE PERMIT IS REQUIRED FROM THE STATE ENGINEER'S OFFICE, PRIOR TO PUMPING IT OUT.
7. GROUNDWATER SHALL BE SAMPLED AND SENT TO AN APPROVED LABORATORY FOR TESTING PRIOR TO BEING DISCHARGED. TESTING SHALL BE IN ACCORDANCE WITH PERMIT FOR STORMWATER DISCHARGE.
8. APPROVED EROSION AND SEDIMENT CONTROL "BEST MANAGEMENT PRACTICES" (BMPS) SHALL BE MAINTAINED AND KEPT IN GOOD REPAIR FOR THE DURATION OF THIS PROJECT. AT A MINIMUM, THE CONTRACTOR SHALL INSPECT ALL BMPS EVERY 14 DAYS, AND AFTER ALL SIGNIFICANT PRECIPITATION EVENTS I.E. RAINFALL, SNOWMELT. ALL NECESSARY MAINTENANCE AND REPAIR ACTIVITIES SHALL BE COMPLETED WITHIN TWENTY-FOUR (24) HOURS AFTER DIRECTION BY THE INSPECTOR. ACCUMULATED SEDIMENT AND CONSTRUCTION DEBRIS SHALL BE REMOVED WEEKLY FROM ALL BMPS, OR AT ANY TIME THAT SEDIMENT OR CONSTRUCTION DEBRIS ADVERSELY IMPACTS THE FUNCTIONING OF THE BMPS.
9. TOPSOIL SHALL BE STOCKPILED WITHIN LIMITS OF CONSTRUCTION FOR USE ON AREAS TO BE RE-VEGETATED. ANY AND ALL STOCKPILES SHALL BE PLACED IN AN APPROVED LOCATION AND PROTECTED FROM EROSIVE ELEMENTS USING MEASURES SPECIFIED IN THE EROSION CONTROL PLAN.
10. SOILS THAT WILL BE STOCKPILED FOR MORE THAN THIRTY (30) DAYS SHALL BE MULCHED AND SEEDED WITH A TEMPORARY OR PERMANENT GRASS COVER WITHIN FOURTEEN (14) DAYS OF STOCKPILE CONSTRUCTION.
11. ANY SETTLEMENT OR SOIL ACCUMULATIONS BEYOND THE LIMITS OF CONSTRUCTION DUE TO GRADING OR EROSION SHALL BE REPAIRED IMMEDIATELY BY THE CONTRACTOR. THE CONTRACTOR SHALL BE HELD RESPONSIBLE FOR REMEDIATION OF ANY ADVERSE IMPACTS TO ADJACENT WATERWAYS, WETLANDS, PROPERTIES, ETC. RESULTING FROM WORK DONE AS PART OF THIS PROJECT.
12. A WATER SOURCE MUST BE AVAILABLE ON SITE DURING EARTHWORK OPERATIONS AND UTILIZED AS REQUIRED TO MINIMIZE DUST FROM EARTHWORK EQUIPMENT AND WIND.
13. THE CONTRACTOR MUST KEEP ALL POLLUTANTS, INCLUDING SEDIMENT, CONSTRUCTION DEBRIS, AND TRENCH BACKFILL MATERIALS FROM ENTERING THE STORM SEWER SYSTEM.
14. ALL SPILLS INCLUDING, BUT NOT LIMITED TO, PETROLEUM PRODUCTS, SOLVENTS, AND CEMENT SHALL BE CLEANED UP IMMEDIATELY. MOFFAT COUNTY ENGINEERING DIVISION SHALL BE NOTIFIED IMMEDIATELY.
15. THE CONTRACTOR SHALL ENSURE THAT ALL LOADS OF CUT AND FILL MATERIAL IMPORTED TO OR EXPORTED FROM THE SITE SHALL BE PROPERLY COVERED TO PREVENT LOSS OF THE MATERIAL DURING TRANSPORT ON PUBLIC RIGHT-OF-WAY.
16. THE CONTRACTOR SHALL ENSURE THAT ALL MATERIAL EXPORTED FROM THE SITE, IS DISPOSED OF AT A SITE PERMITTED TO ACCEPT SUCH MATERIAL.
17. THE USE OF REBAR, STEEL STAKES OR STEEL FENCE POSTS FOR STAKING DOWN STRAW OR HAY BALES, OR TO SUPPORT SILT FENCING USED AS AN EROSION CONTROL MEASURE, IS PROHIBITED.
18. THE CLEANING OF CONCRETE DELIVERY TRUCK CHUTES IS RESTRICTED TO APPROVED LOCATIONS ON THE JOB SITE. THE DISCHARGE OF WATER CONTAINING WASTE CEMENT TO THE STORM SEWER SYSTEM IS PROHIBITED. ALL CONCRETE WASTE SHALL BE PROPERLY CLEANED UP AND DISPOSED OF AT AN APPROPRIATE LOCATION.
19. PRIOR TO ACTUAL CONSTRUCTION, THE CONTRACTOR SHALL VERIFY THE LOCATION OF EXISTING UTILITIES. FOR INFORMATION, CONTACT THE UTILITY NOTIFICATION CENTER OF COLORADO AT 811.
20. CONTRACTOR TO FILE "NOTICE OF TERMINATION" WITH CDPHE ONCE PROJECT IS COMPLETE AND ALL DISTURBED AREAS HAVE BEEN STABILIZED INCLUDING TEMPORARY BMPS REMOVED.

OLSSON ASSOCIATES
4690 Table Mountain Drive, Suite 200
Golden, CO 80403
TEL 303.237.2072
FAX 303.237.2659
www.olssonassociates.com

COLORADO REGISTERED PROFESSIONAL ENGINEER 38514

OLSSON ASSOCIATES ASSUMES NO RESPONSIBILITY FOR EXISTING UTILITY LOCATIONS (HORIZONTAL OR VERTICAL). THE EXISTING UTILITIES SHOWN ON THIS DRAWING HAVE BEEN PLOTTED FROM THE BEST AVAILABLE INFORMATION. IT IS HOWEVER THE RESPONSIBILITY OF THE CONTRACTOR TO FIELD VERIFY THE LOCATION OF ALL UTILITIES PRIOR TO THE COMMENCEMENT OF ANY CONSTRUCTION ACTIVITIES.

811 Know what's below. Call before you dig.
CALL 811 SEVENTY-TWO HOURS PRIOR TO DIGGING, GRADING OR EXCAVATING FOR THE MARKING OF UNDERGROUND MEMBER UTILITIES

REVISIONS

REV. NO.	DATE	REVISIONS DESCRIPTION

COVER SHEET

AXIA ENERGY COMPLETION PIT
MOFFAT COUNTY, COLORADO

CRAIG, COLORADO

2012

drawn by: MEO
checked by: WEP
approved by: WEP
QA/QC by: LP
project no.: 012-1222
drawing no.:
date: 06.22.2012

SHEET 1

DWG: F:\Projects\012-1222_WTRS\Final_Plans\121222_COVR.dwg USER: cuhrich
DATE: Jul 11, 2012 8:34am XREFS: 121222_BRDR

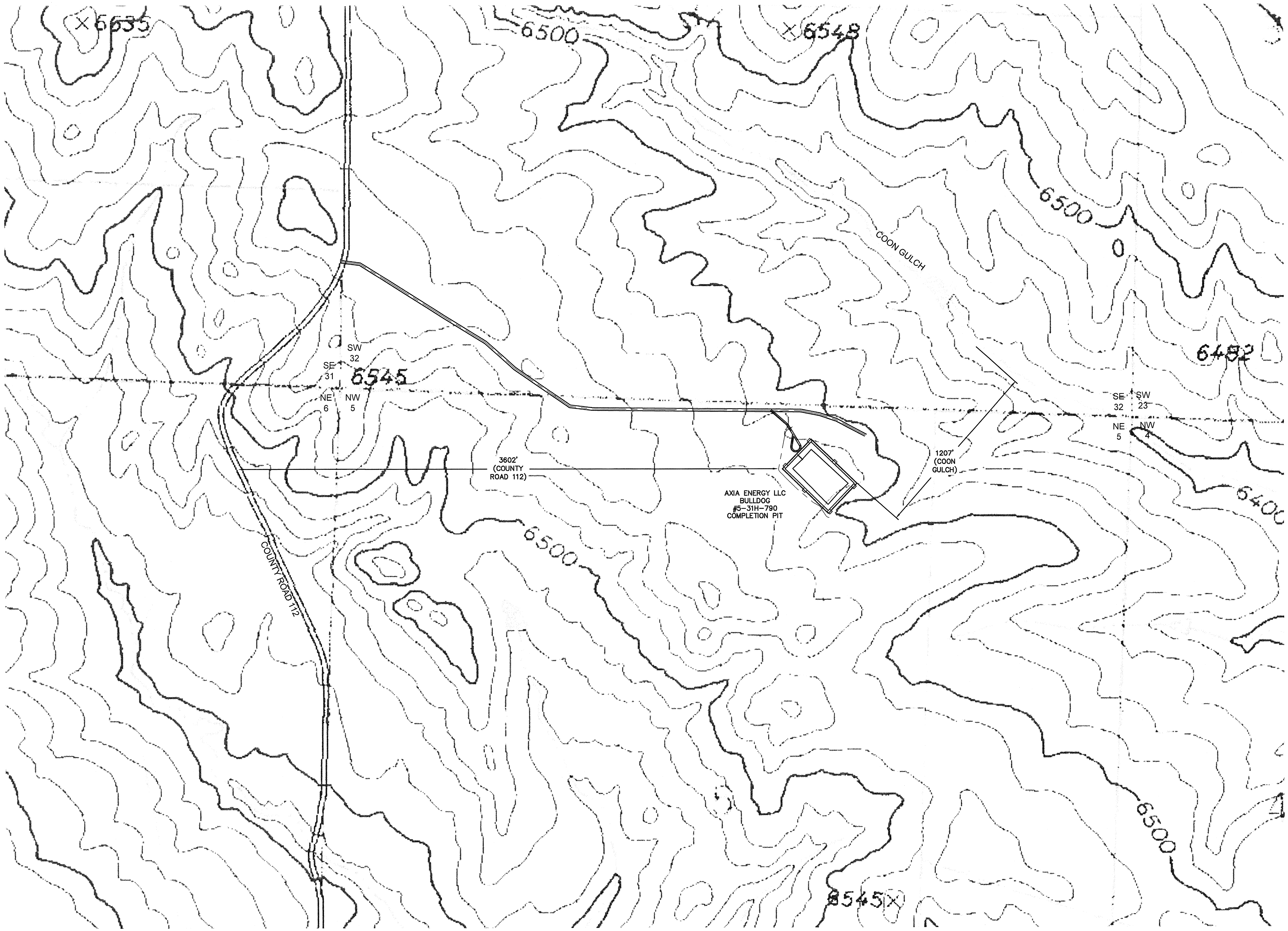

OLSSON® ASSOCIATES

4690 Table Mountain Drive, Suite 200
Golden, CO 80403
TEL 303.237.2072
FAX 303.237.2659
www.olssonassociates.com

OLSSON ASSOCIATES ASSUMES NO RESPONSIBILITY FOR EXISTING UTILITY LOCATIONS (HORIZONTAL OR VERTICAL). THE EXISTING UTILITIES SHOWN ON THIS DRAWING HAVE BEEN PLOTTED FROM THE BEST AVAILABLE INFORMATION. IT IS HOWEVER THE RESPONSIBILITY OF THE CONTRACTOR TO FIELD VERIFY THE LOCATION OF ALL UTILITIES PRIOR TO THE COMMENCEMENT OF ANY CONSTRUCTION ACTIVITIES.

811 Know what's below. Call before you dig.
CALL 811 SEVENTY-TWO HOURS PRIOR TO DIGGING, GRADING OR EXCAVATING FOR THE MARKING OF UNDERGROUND MEMBER UTILITIES

REVISIONS

REV. NO.	DATE	REVISIONS DESCRIPTION

LOCATION MAP

AXIA ENERGY COMPLETION PIT
MOFFAT COUNTY, COLORADO

2012

CRAIG, COLORADO

drawn by:	MEO
checked by:	WEP
approved by:	WEP
QA/QC by:	LP
project no.:	012-1222
drawing no.:	
date:	06.22.2012

SHEET
2

DWG: F:\Projects\012-1222_WTRS\Final_Plans\121222_VMAP.dwg USER: cuhrich
DATE: Jul 11, 2012 8:35am XREFS: 121222_BRDR Drainage 121222_PBASE

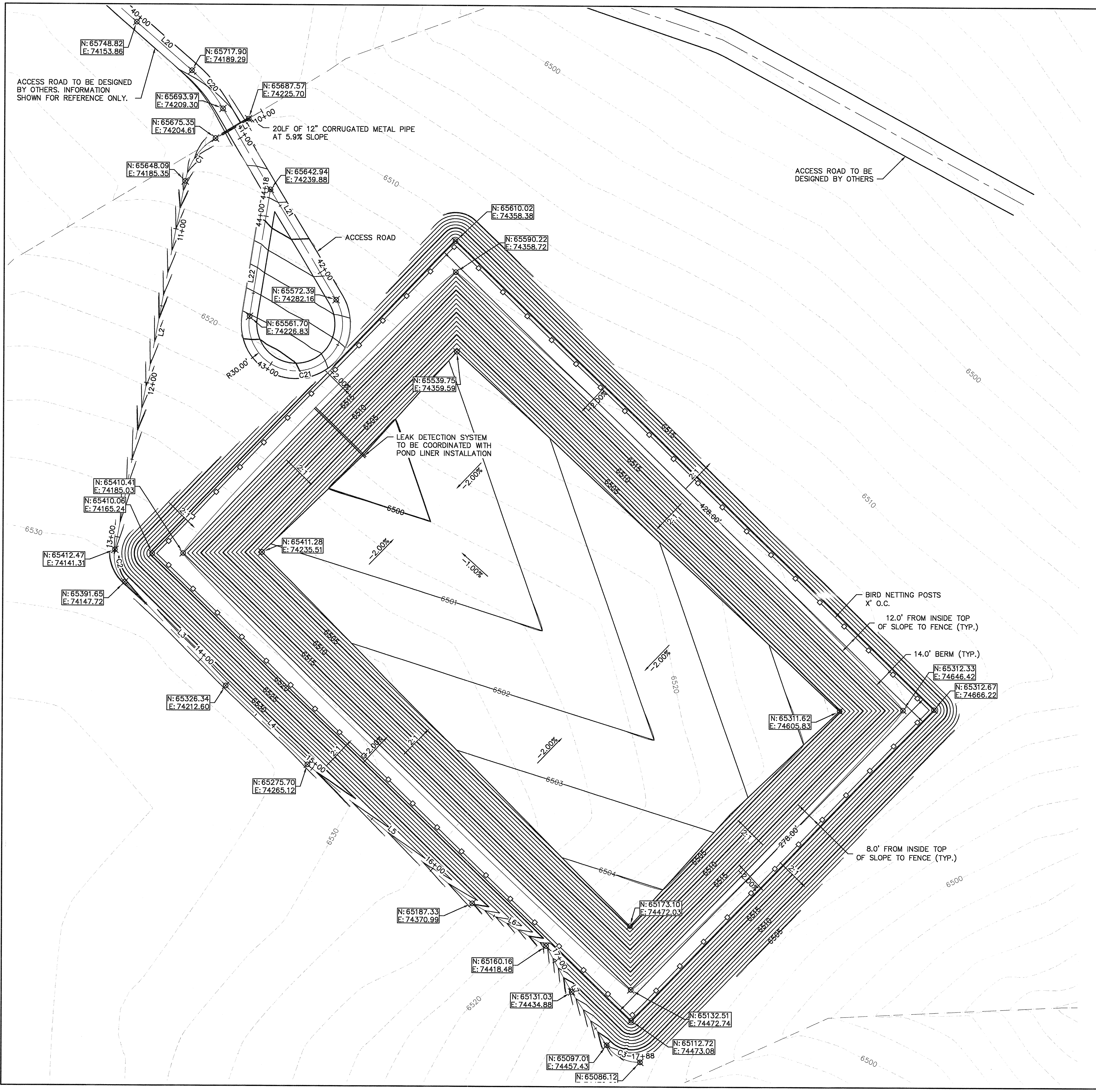

N

1" = 30'

0' 15' 30' 60'

SCALE IN FEET

NOTES:

1. SITE TOPOGRAPHY PROVIDED BY:
   UINTAH ENGINEERING & LAND SURVEYING
   85 SO. 200 EAST
   VERNAL, UTAH 84078 (435)789-1017
2. ALL CONTOUR INFORMATION USED FOR DESIGN WILL NEED TO BE FIELD VERIFIED.
3. POND VOLUMES SHOWN ON PLANS ARE MEASURED FROM WATER SURFACE ELEVATION TO BOTTOM OF POND.
4. ACCESS ROAD SHALL BE DESIGNED BY OTHERS.

DRAINAGE SWALE

NO.	LENGTH	RADIUS	LINE/CHORD BEARING	CHORD LENGTH
C1	34.43'	40.00'	S35°14'53"W	33.38
C2	22.65'	23.43'	S17°06'48"E	21.78
C3	25.09'	24.39'	S63°00'31"E	24.00
L1	34.14'		S59°54'35"W	
L2	239.70'		S10°35'12"W	
L3	92.06'		S44°48'48"E	
L4	72.95'		S46°02'22"E	
L5	137.91'		S50°08'57"E	
L6	54.71'		S60°13'38"E	
L7	33.43'		S29°22'39"E	

ACCESS ROAD

NO.	LENGTH	RADIUS	LINE/CHORD BEARING	CHORD LENGTH
C20	31.32'	100.00'	S39°54'27"E	31.20
C21	115.18'	29.99'	S79°05'52"W	56.35
L20	47.02'		S48°52'51"E	
L21	141.74'		S30°56'03"E	
L22	82.25'		N9°07'48"E	

OLSSON® ASSOCIATES
4690 Table Mountain Drive, Suite 200 Golden, CO 80403
TEL 303.237.2072 FAX 303.237.2659 www.olssonassociates.com

OLSSON ASSOCIATES ASSUMES NO RESPONSIBILITY FOR EXISTING UTILITY LOCATIONS (HORIZONTAL OR VERTICAL). THE EXISTING UTILITIES SHOWN ON THIS DRAWING HAVE BEEN PLOTTED FROM THE BEST AVAILABLE INFORMATION. IT IS HOWEVER THE RESPONSIBILITY OF THE CONTRACTOR TO FIELD VERIFY THE LOCATION OF ALL UTILITIES PRIOR TO THE COMMENCEMENT OF ANY CONSTRUCTION ACTIVITIES

811 Know what's below. Call before you dig.
CALL 811 SEVENTY-TWO HOURS PRIOR TO DIGGING, GRADING OR EXCAVATING FOR THE MARKING OF UNDERGROUND MEMBER UTILITIES

REVISIONS

REV. NO.	DATE	REVISIONS DESCRIPTION

SITE PLAN

AXIA ENERGY COMPLETION PIT
MOFFAT COUNTY, COLORADO

2012

CRAIG, COLORADO

drawn by: MEO
checked by: WEP
approved by: WEP
QA/QC by: LP
project no.: 012-1222
drawing no.:
date: 06.22.2012

SHEET
3

DWG: F:\Projects\012-1222_WTRS\Final_Plans\121222_POND.dwg USER: cuhrich
DATE: Jul 11, 2012 8:36am XREFS: 121222_XBASE 121222_BRDR 121222_XTOPO 121222_PTOPO 121222_PBASE 121222_PXSEC

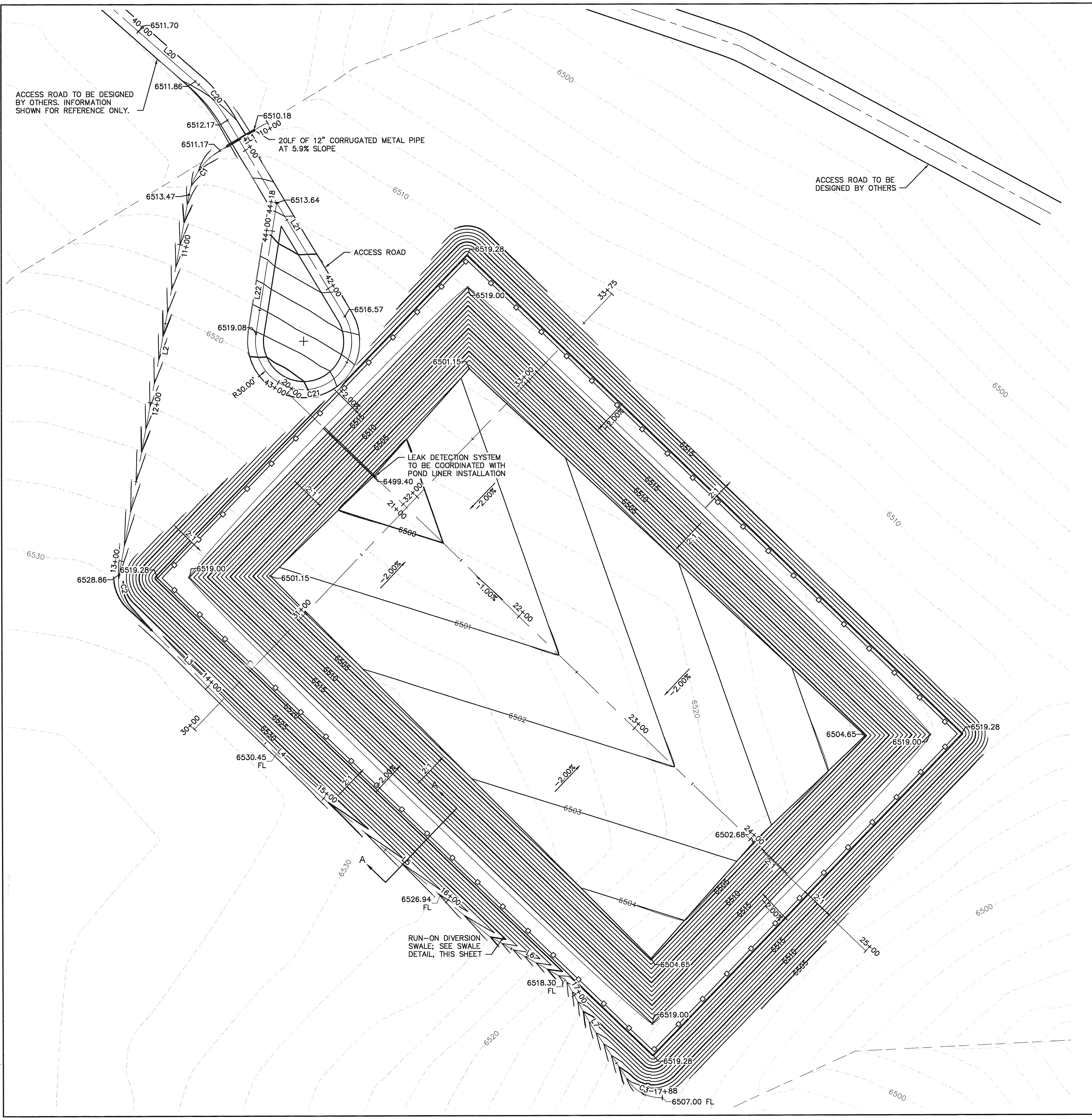

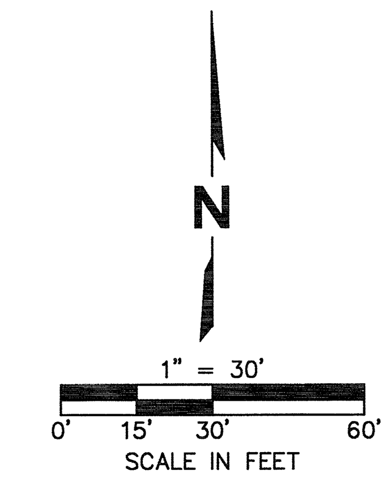

NOTES:

1. SITE TOPOGRAPHY PROVIDED BY:
   UINTAH ENGINEERING & LAND SURVEYING
   85 SO. 200 EAST
   VERNAL, UTAH 84078 (435)789-1017
2. ALL CONTOUR INFORMATION USED FOR DESIGN WILL NEED TO BE FIELD VERIFIED.
3. POND VOLUMES SHOWN ON PLANS ARE MEASURED FROM WATER SURFACE ELEVATION TO BOTTOM OF POND.
4. ACCESS ROAD SHALL BE DESIGNED BY OTHERS.
5. NO BUILDING, STRUCTURE OR FILL WILL BE PLACED IN THE COMPLETION PIT AREA AND NO CHANGES OR ALTERATIONS AFFECTING THE HYDRAULIC CHARACTERISTICS OF THE COMPLETION PIT AREA WILL BE MADE WITHOUT THE APPROVAL OF THE COUNTY.
6. MAINTENANCE AND OPERATION OF THE COMPLETION PIT AREA IS THE RESPONSIBILITY OF THE PROPERTY OWNER. IF OWNER FAILS IN THIS RESPONSIBILITY, THE COUNTY HAS THE RIGHT TO ENTER THE PROPERTY, MAINTAIN THE COMPLETION PIT AREA, AND BE REIMBURSED FOR COSTS INCURRED.
7. ALL BASIN BOUNDARIES SHALL BE VERIFIED. AS-BUILT DRAWINGS SHALL BE PREPARED BY A REGISTERED PROFESSIONAL ENGINEER PRIOR TO ISSUANCE OF CERTIFICATE OF OCCUPANCY FOR ANY STRUCTURE WITHIN THE DEVELOPMENT.
8. PERMISSION TO REPRODUCE THESE PLANS IS HEREBY GIVEN TO MOFFAT COUNTY FOR COUNTY PURPOSES ASSOCIATED WITH PLAN REVIEW, APPROVAL, PERMITTING, INSPECTION AND CONSTRUCTION OF WORK.

ABBREVIATION KEY:

HP	HIGH POINT
ME	MATCH EXISTING
FL	FLOWLINE OF SWALE

WATER IMPOUNDMENT (INCLUDING ACCESS ROAD) EARTHWORK VOLUMES:

VOLUME CUT: 61,329 CY
VOLUME FILL: 4,247 CY (RAW)
VOLUME NET: 57,082 CY (CUT)

EARTHWORK DISCLAIMER
THE EARTHWORK CUT AND FILL QUANTITIES ARE BASED ON THE DIFFERENCE BETWEEN FINISHED AND EXISTING SURFACES AND ARE UNADJUSTED. THE ENGINEER DOES NOT GUARANTEE THAT THESE WILL BE THE ACTUAL EARTHWORK CUT AND FILL QUANTITIES GENERATED ON-SITE. THESE NUMBERS ARE NOT TO BE USED FOR BIDDING PURPOSES. THE CONTRACTOR SHALL BE RESPONSIBLE FOR PERFORMING HIS OWN DIRT TAKE-OFF OF THE PROPOSED GRADING AND SHALL EVALUATE THE GEOTECHNICAL REPORT TO MAKE HIS OWN ASSUMPTIONS PRIOR TO THE START OF GRADING. THE CONTRACTOR'S BID FOR THE SITE GRADING SHALL ASSUME THAT ANY IMPORT OR EXPORT NOT IDENTIFIED IN THE PLANS SHALL BE CONSIDERED INCIDENTAL TO THE BID, AND NO ADDITIONAL COMPENSATION SHALL BE PAID TO THE GRADING CONTRACTOR FOR HAULING OFF OR IMPORT OF FILL UNLESS MUTUALLY AGREED TO BY THE PROJECT MANAGER.

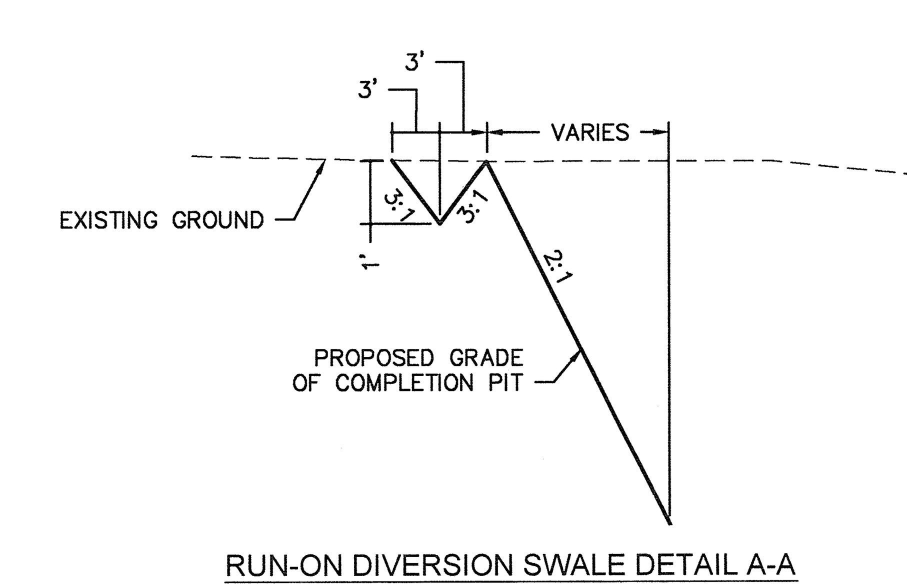

RUN-ON DIVERSION SWALE DETAIL A-A
NOT TO SCALE

OLSSON ASSOCIATES
4690 Table Mountain Drive, Suite 200
Golden, CO 80403
TEL 303.237.2072
FAX 303.237.2659
www.olssonassociates.com

OLSSON ASSOCIATES ASSUMES NO RESPONSIBILITY FOR EXISTING UTILITY LOCATIONS (HORIZONTAL OR VERTICAL). THE EXISTING UTILITIES SHOWN ON THIS DRAWING HAVE BEEN PLOTTED FROM THE BEST AVAILABLE INFORMATION. IT IS HOWEVER THE RESPONSIBILITY OF THE CONTRACTOR TO FIELD VERIFY THE LOCATION OF ALL UTILITIES PRIOR TO THE COMMENCEMENT OF ANY CONSTRUCTION ACTIVITIES

811 Know what's below. Call before you dig.
CALL 811 SEVENTY-TWO HOURS PRIOR TO DIGGING, GRADING OR EXCAVATING FOR THE MARKING OF UNDERGROUND MEMBER UTILITIES

REV. NO.	DATE	REVISIONS DESCRIPTION

REVISIONS

GRADING PLAN

AXIA ENERGY COMPLETION PIT
MOFFAT COUNTY, COLORADO

2012

CRAIG, COLORADO

drawn by:	MEO
checked by:	WEP
approved by:	WEP
QA/QC by:	LP
project no.:	012-1222
drawing no.:	
date:	06.22.2012

SHEET
4

DWG: F:\Projects\012-1222_WTRS\Final_Plans\121222_POND.dwg USER: cuhrich
DATE: Jul 11, 2012 8:36am XREFS: 121222_XBASE 121222_BRDR 121222_XTOPO 121222_PTOPO 121222_PBASE 121222_PXSEC

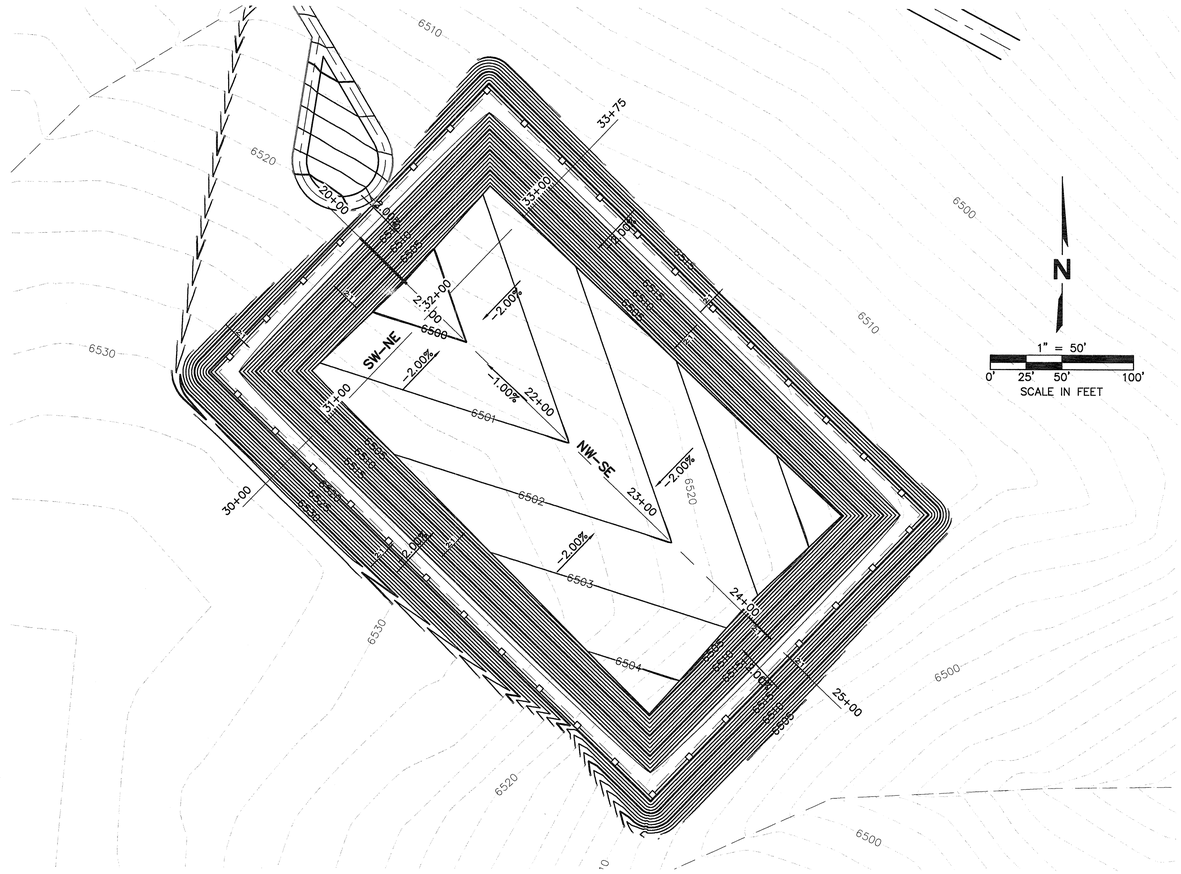

NOTES:

1. SITE TOPOGRAPHY PROVIDED BY:
   UINTAH ENGINEERING & LAND SURVEYING
   85 SO. 200 EAST
   VERNAL, UTAH 84078 (435)789-1017
2. ALL CONTOUR INFORMATION USED FOR DESIGN WILL NEED TO BE FIELD VERIFIED.
3. POND VOLUMES SHOWN ON PLANS ARE MEASURED FROM WATER SURFACE ELEVATION TO BOTTOM OF POND.
4. ACCESS ROAD SHALL BE DESIGNED BY OTHERS.

STAGE STORAGE TABLE		
ELEV	VOLUME (CF)	VOLUME (BBL)
6,499.40	0	0
6,500.00	379	68
6,501.00	7,138	1,271
6,502.00	29,036	5,172
6,503.00	69,842	12,440
6,504.00	126,448	22,523
6,505.00	191,280	34,071
6,506.00	259,208	46,170
6,507.00	329,331	58,660
6,508.00	401,678	71,547
6,509.00	476,277	84,834
6,510.00	553,158	98,528
6,511.00	632,350	112,634
6,512.00	713,881	127,156
6,513.00	797,781	142,100
6,514.00	884,078	157,471
6,515.00	972,802	173,275
6,516.00	1,063,981	189,515
6,517.00*	1,157,644	206,198
6,518.00	1,253,821	223,329
6,519.00	1,352,539	240,913

*MAXIMUM WATER SURFACE ELEVATION PROVIDING 2' OF FREEBARD.

SECTION NW-SE

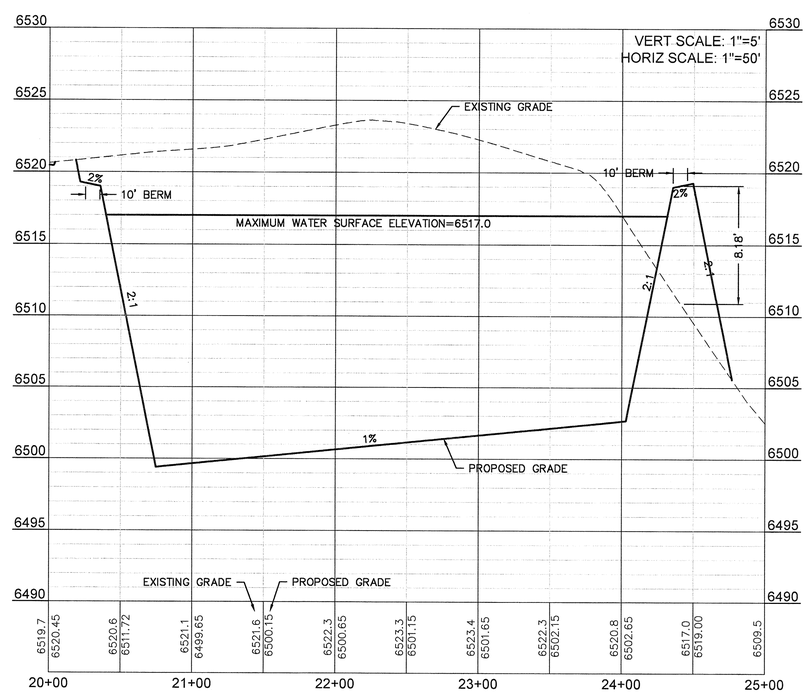

SECTION SW-NE

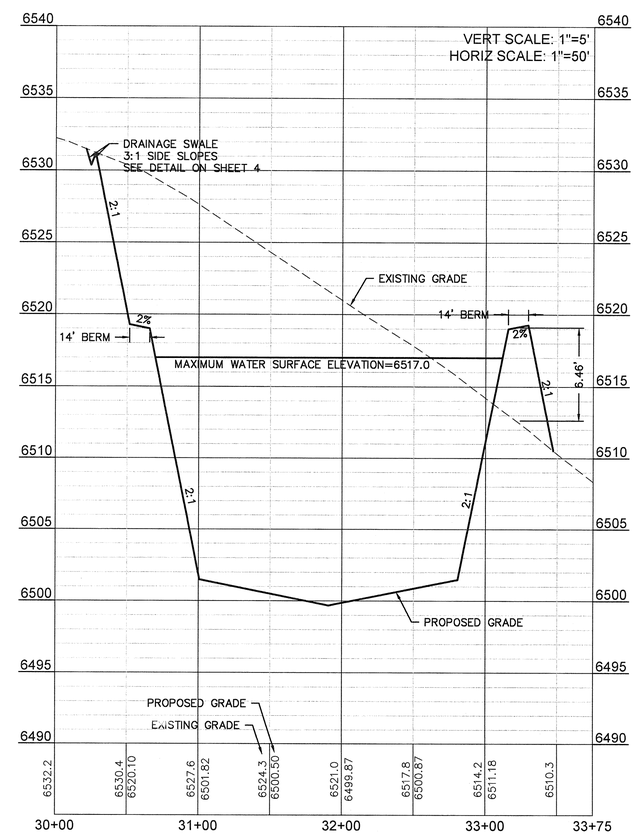

OLSSON ASSOCIATES
4690 Table Mountain Drive, Suite 200
Golden, CO 80403
TEL 303.237.2072
FAX 303.237.2659
www.olssonassociates.com

COLORADO REGISTERED PROFESSIONAL ENGINEER 38514

OLSSON ASSOCIATES ASSUMES NO RESPONSIBILITY FOR EXISTING UTILITY LOCATIONS (HORIZONTAL OR VERTICAL). THE EXISTING UTILITIES SHOWN ON THIS DRAWING HAVE BEEN PLOTTED FROM THE BEST AVAILABLE INFORMATION. IT IS HOWEVER THE RESPONSIBILITY OF THE CONTRACTOR TO FIELD VERIFY THE LOCATION OF ALL UTILITIES PRIOR TO THE COMMENCEMENT OF ANY CONSTRUCTION ACTIVITIES.

811 Know what's below. Call before you dig.
CALL 811 SEVENTY-TWO HOURS PRIOR TO DIGGING, GRADING OR EXCAVATING FOR THE MARKING OF UNDERGROUND MEMBER UTILITIES

REV. NO.	DATE	REVISIONS DESCRIPTION

REVISIONS

POND SECTIONS

AXIA ENERGY COMPLETION PIT
MOFFAT COUNTY, COLORADO

CRAIG, COLORADO

2012

drawn by: MEO
checked by: WEP
approved by: WEP
QA/QC by: LP
project no.: 012-1222
drawing no.:
date: 06.22.2012

SHEET
5

DWG: F:\Projects\012-1222_WTRS\Final_Plans\121222_POND.dwg USER: cuhrich
DATE: Jul 11, 2012 8:37am XREFS: 121222_XBASE 121222_BRDR 121222_XTOPO 121222_PTOPO 121222_PBASE 121222_PXSEC

DRAINAGE PLAN NOTES:

1. NO BUILDING, STRUCTURE, OR FILL WILL BE PLACED IN THE COMPLETION PIT AND NO CHANGES OR ALTERATIONS AFFECTING THE HYDRAULIC CHARACTERISTICS OF THE COMPLETION PIT WILL BE MADE WITHOUT THE APPROVAL OF THE COUNTY.
2. MAINTENANCE AND OPERATION OF THE COMPLETION PIT AREA IS THE RESPONSIBILITY OF THE PROPERTY OWNER. IF OWNER FAILS IN THIS RESPONSIBILITY, THE COUNTY HAS THE RIGHT TO ENTER THE PROPERTY, MAINTAIN THE COMPLETION PIT AREA, AND BE REIMBURSED FOR COSTS INCURRED.
3. COMPLETION PIT VOLUMES AND BASIN BOUNDARIES SHALL BE VERIFIED. AS-BUILT DRAWINGS SHALL BE PREPARED BY A REGISTERED PROFESSIONAL ENGINEER PRIOR TO ISSUANCE OF CERTIFICATE OF OCCUPANCY FOR ANY STRUCTURE WITHIN THE DEVELOPMENT.
4. PERMISSION TO REPRODUCE THESE PLANS IS HEREBY GIVEN TO MOFFAT COUNTY FOR COUNTY PURPOSES ASSOCIATED WITH PLAN REVIEW, APPROVAL, PERMITTING, INSPECTION AND CONSTRUCTION OF WORK.

LEGEND

- DRAINAGE BOUNDARY
- 6400 — PROPOSED MAJOR CONTOUR
- 6400 — PROPOSED MINOR CONTOUR
- PROPOSED DRAINAGE FLOW DIRECTION

XX — BASIN DESIGNATION
X.XX — 25-YR RUNOFF COEFF.
XX — 100-YR RUNOFF COEFF.
XX — BASIN AREA IN AC.

N

1" = 40'
0' 20' 40' 80'
SCALE IN FEET

OLSSON ASSOCIATES
4690 Table Mountain Drive, Suite 200
Golden, CO 80403
TEL 303.237.2072
FAX 303.237.2659
www.olssonassociates.com

COLORADO REGISTERED PROFESSIONAL ENGINEER
#8514
7/11/12

OLSSON ASSOCIATES ASSUMES NO RESPONSIBILITY FOR EXISTING UTILITY LOCATIONS (HORIZONTAL OR VERTICAL). THE EXISTING UTILITIES SHOWN ON THIS DRAWING HAVE BEEN PLOTTED FROM THE BEST AVAILABLE INFORMATION. IT IS HOWEVER THE RESPONSIBILITY OF THE CONTRACTOR TO FIELD VERIFY THE LOCATION OF ALL UTILITIES PRIOR TO THE COMMENCEMENT OF ANY CONSTRUCTION ACTIVITIES.

811 Know what's below. Call before you dig.
CALL 811 SEVENTY-TWO HOURS PRIOR TO DIGGING, GRADING OR EXCAVATING FOR THE MARKING OF UNDERGROUND MEMBER UTILITIES

REV. NO.	DATE	REVISIONS DESCRIPTION

REVISIONS

DRAINAGE PLAN

AXIA ENERGY COMPLETION PIT
MOFFAT COUNTY, COLORADO

CRAIG, COLORADO

2012

drawn by:	MEO
checked by:	WEP
approved by:	WEP
QA/QC by:	LP
project no.:	012-1222
drawing no.:	
date:	06.22.2012

SHEET
6

DWG: F:\Projects\012-1222_WTRS\Final_Plans\121222_DRNG.dwg USER: cuhrich
DATE: Jul 11, 2012 8:37am XREFS: 121222_XBASE 121222_PBASE 121222_BRDR 121222_PTOPO 121222_XTOPO Drainage

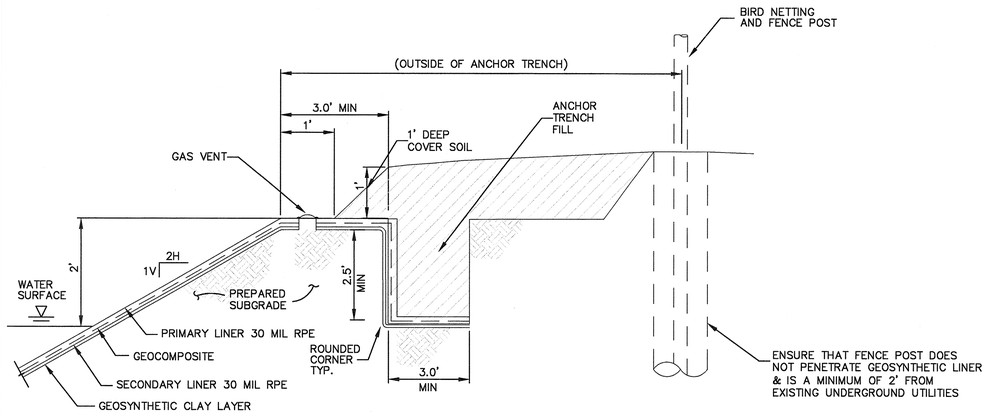

1 – ANCHOR TRENCH DETAIL
N.T.S.

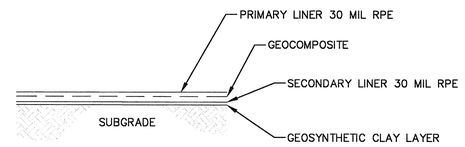

2 – TYPICAL POND LINING SYSTEM DETAIL
N.T.S.

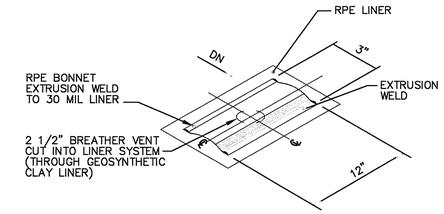

4 – AIR/GAS VENT DETAIL
N.T.S.

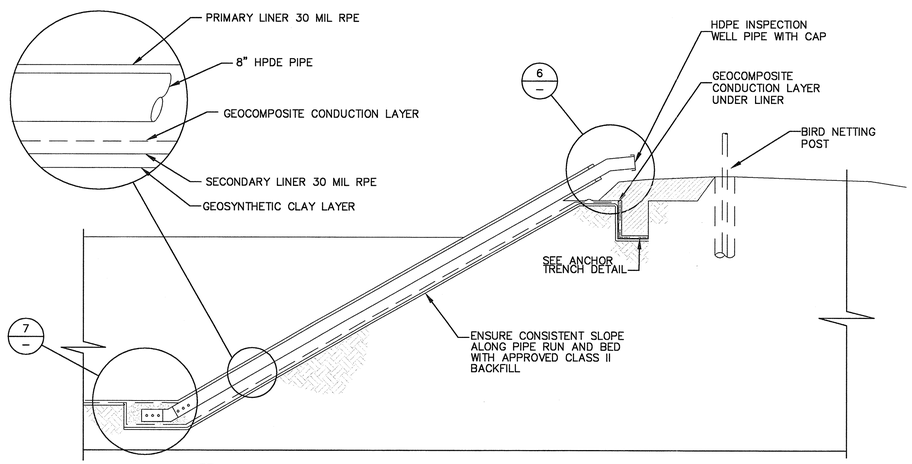

5 – LEAK DETECTION WELL DETAIL WITH PIPE RESTING ON SLOPE GRADE
N.T.S.

NOTE: PIT BOTTOM TO BE SLOPED TOWARDS SUMP PIT. SEE GRADING PLAN FOR ELEVATIONS.

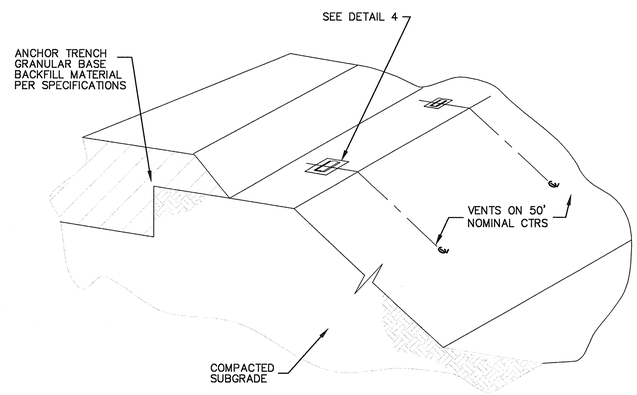

3 – AIR/GAS VENT LOCATION DETAIL
N.T.S.

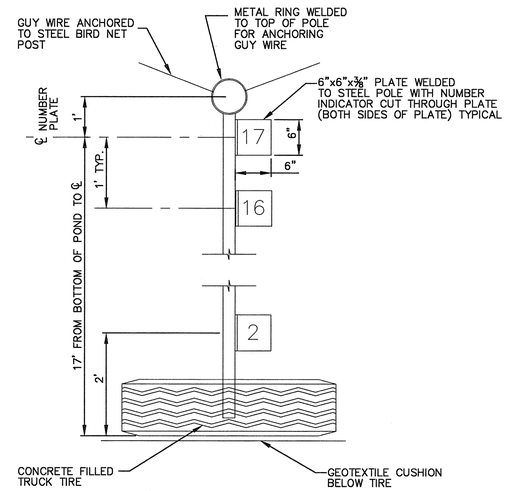

9 – STAFF GAGE DETAIL
N.T.S. (TYPICAL)

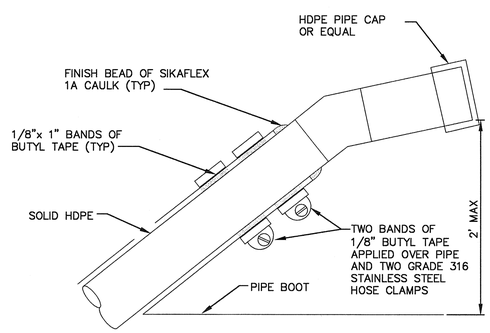

NOTE:
PIPE DIAMETER SHOULD BE LARGE ENOUGH TO FIT A SUBMERSIBLE PUMP WITH SUFFICIENT LIFT CAPACITY TO REMOVE FLUID THROUGH THE LEAK DETECTION SYSTEM. 8" DIAMETER IS RECOMMENDED.

6 – PIPE BOOT SEALING DETAIL
N.T.S.

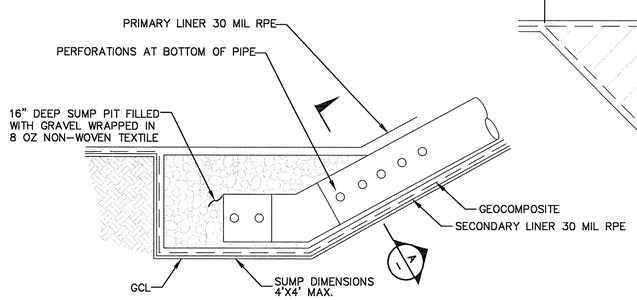

7 – SUMP PIT FILLED WITH GRAVEL
N.T.S.

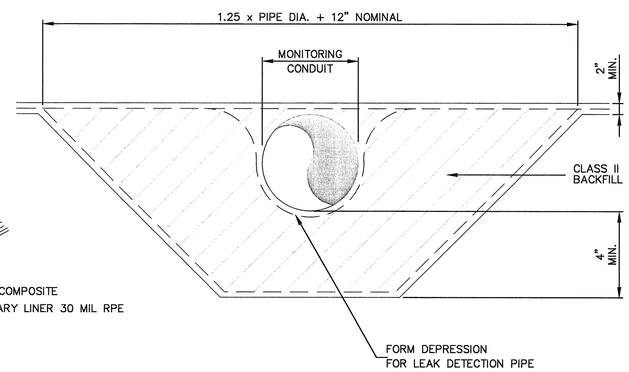

A – SECTION
N.T.S.

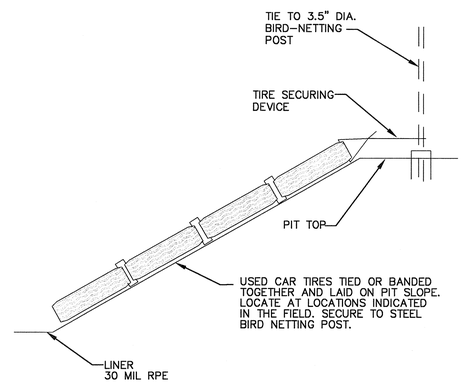

10 – TIRE LADDER
N.T.S. (TYPICAL)

OLSSON ASSOCIATES
4690 Table Mountain Drive, Suite 200
Golden, CO 80403
TEL 303.237.2072
FAX 303.237.2656
www.olssonassociates.com

COLORADO REGISTERED PROFESSIONAL ENGINEER 38514 WILLIAM E. PARKER

OLSSON ASSOCIATES ASSUMES NO RESPONSIBILITY FOR EXISTING UTILITY LOCATIONS (HORIZONTAL OR VERTICAL). THE EXISTING UTILITIES SHOWN ON THIS DRAWING HAVE BEEN PLOTTED FROM THE BEST AVAILABLE INFORMATION. IT IS HOWEVER THE RESPONSIBILITY OF THE CONTRACTOR TO FIELD VERIFY THE LOCATION OF ALL UTILITIES PRIOR TO THE COMMENCEMENT OF ANY CONSTRUCTION ACTIVITIES.

811 Know what's below. Call before you dig.
CALL 811 SEVENTY-TWO HOURS PRIOR TO DIGGING, GRADING OR EXCAVATING FOR THE MARKING OF UNDERGROUND MEMBER UTILITIES

REVISIONS

REV. NO.	DATE	REVISIONS DESCRIPTION

DETAILS

AXIA ENERGY COMPLETION PIT
MOFFAT COUNTY, COLORADO

2012

CRAIG, COLORADO

drawn by:	MEO
checked by:	WEP
approved by:	WEP
QA/QC by:	LP
project no.:	012-1222
drawing no.:	
date:	06.22.2012

SHEET
7

DWG: F:\Projects\012-1222_WTRS\Final_Plans\121222_DETL.dwg USER: cuhrich
DATE: Jul 11, 2012 8:37am XREF'S: 121222_BRDR

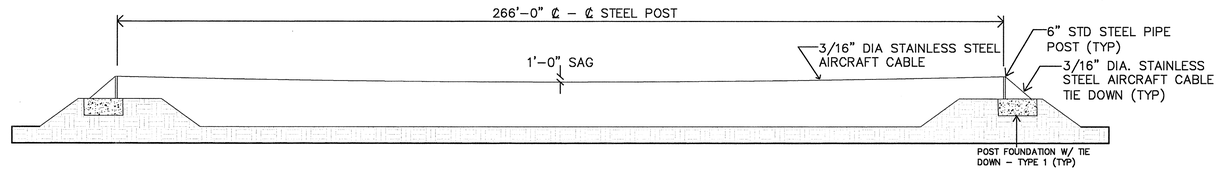

CABLE SUPPORT FOR BIRD NETTING
SCALE: NOT TO SCALE

NOTES:
1. AIRCRAFT CABLE TO BE TIGHTENED BY RACHETING UNTIL REACHING APPROX. SAG OF 1'-0". TURNBUCKLES TO BE USED FOR FINAL SAG POSITIONING ONLY.
2. REFER TO DETAILS FOR AIRCRAFT CABLE HARDWARE.
3. SUBSTITUTION OF CABLE HARDWARE MUST BE APPROVED BY ENGINEER OF RECORD BEFORE IMPLEMENTATION.

TOP VIEW

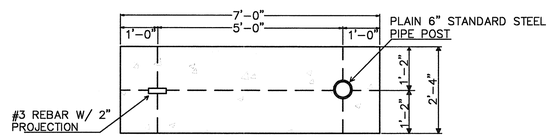

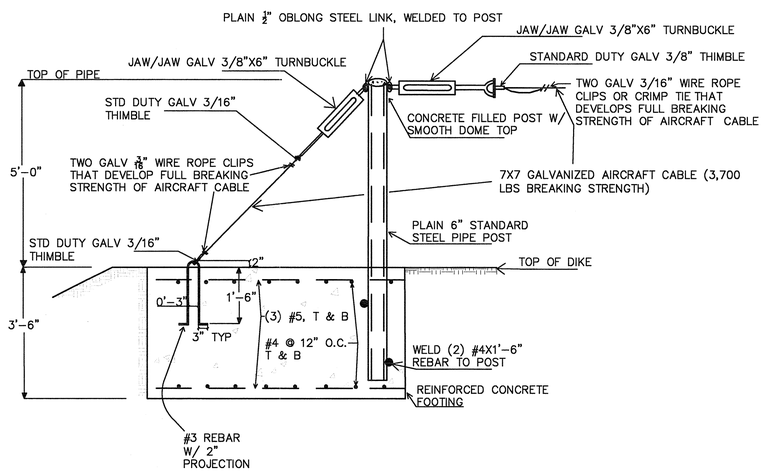

NOTE: BIRD NETTING NOT SHOWN FOR CLARITY. SEE POST & TIE DOWN FOOTING TYPE 2 FOR TYPICAL CONSTRUCTION

POST & TIE DOWN FOOTING–TYPE 1
SCALE : NOT TO SCALE

TOP VIEW

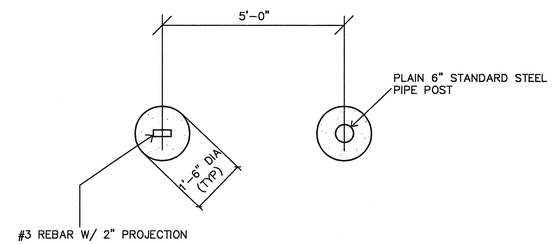

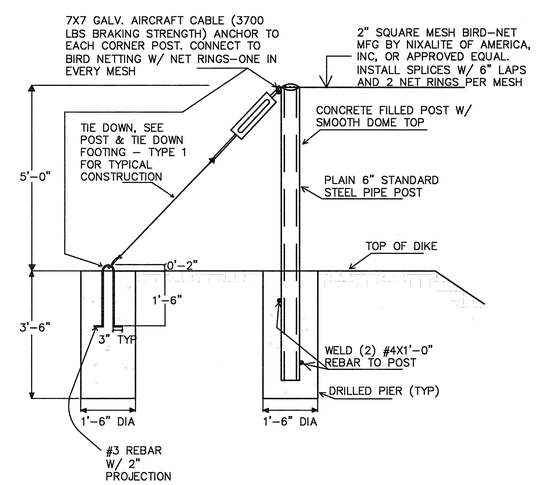

POST & TIE DOWN FOOTING–TYPE 2
SCALE : NOT TO SCALE

OLSSON ASSOCIATES
4690 Table Mountain Drive, Suite 200
Golden, CO 80403
TEL 303.237.2072
FAX 303.237.2659
www.olssonassociates.com

COLORADO REGISTERED PROFESSIONAL ENGINEER 38511 7/11/12

OLSSON ASSOCIATES ASSUMES NO RESPONSIBILITY FOR EXISTING UTILITY LOCATIONS (HORIZONTAL OR VERTICAL). THE EXISTING UTILITIES SHOWN ON THIS DRAWING HAVE BEEN PLOTTED FROM THE BEST AVAILABLE INFORMATION. IT IS HOWEVER THE RESPONSIBILITY OF THE CONTRACTOR TO FIELD VERIFY THE LOCATION OF ALL UTILITIES PRIOR TO THE COMMENCEMENT OF ANY CONSTRUCTION ACTIVITIES.

811 Know what's below. Call before you dig.
CALL 811 SEVENTY-TWO HOURS PRIOR TO DIGGING, GRADING OR EXCAVATING FOR THE MARKING OF UNDERGROUND MEMBER UTILITIES

REV. NO.	DATE	REVISIONS DESCRIPTION

REVISIONS

DETAILS

AXIA ENERGY COMPLETION PIT
MOFFAT COUNTY, COLORADO

2012

CRAIG, COLORADO

drawn by: MEO
checked by: WEP
approved by: WEP
QA/QC by: LP
project no.: 012-1222
drawing no.:
date: 06.22.2012

SHEET
8

DWG: F:\Projects\012-1222_WTRS\Final_Plans\121222_DETL.dwg USER: cuhrich
DATE: Jul 11, 2012 8:37am XREF'S: 121222_BRDR

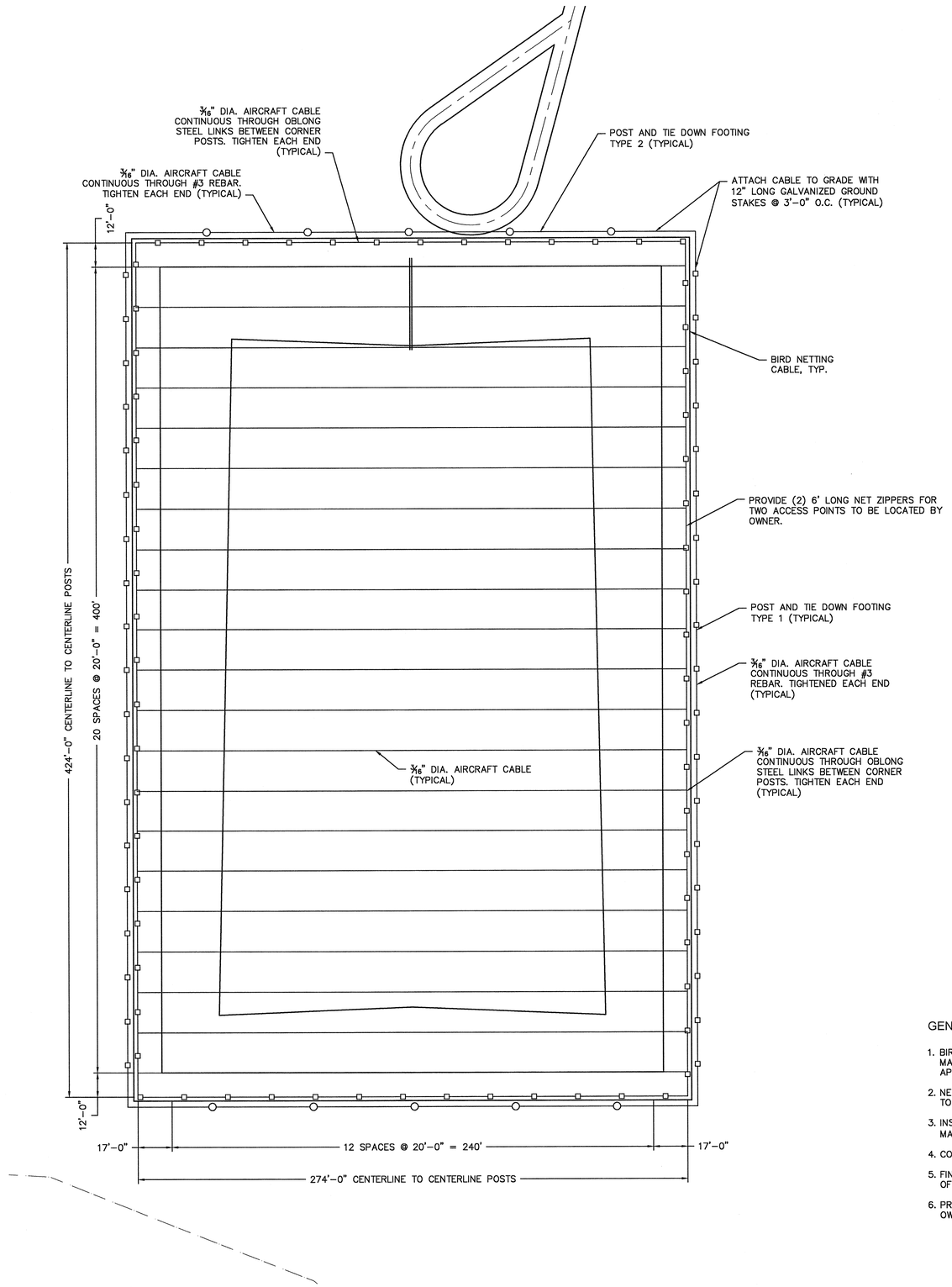

BIRD NETTING CABLE AND POST LAYOUT PLAN

GENERAL NOTES:

1. BIRD NETTING TO BE 2" SQUARE MESH BIRD-NET MANUFACTURED BY NIXALITE OF AMERICA, INC., OR APPROVED EQUAL.
2. NETTING SHALL BE ORDERED IN LARGEST LENGTHS POSSIBLE TO MINIMIZE END OF ROLL AND SIDE SEAMS.
3. INSTALL NETTING TO TENSIONED CABLE SYSTEM PER MANUFACTURER'S RECOMMENDATIONS.
4. CONCRETE SHALL BE CLASS A2.
5. FINISHED INSTALLATION OF BIRD NETTING TO BE TAUT, FREE OF WRINKLES, GAPS AND OPENINGS.
6. PROVIDE TWO ZIPPER ACCESS POINTS TO BE LOCATED BY OWNER.

OLSSON ASSOCIATES
4690 Table Mountain Drive, Suite 200
Golden, CO 80403
TEL 303.237.2072
FAX 303.237.2659
www.olssonassociates.com

COLORADO REGISTERED PROFESSIONAL ENGINEER 38514

OLSSON ASSOCIATES ASSUMES NO RESPONSIBILITY FOR EXISTING UTILITY LOCATIONS (HORIZONTAL OR VERTICAL). THE EXISTING UTILITIES SHOWN ON THIS DRAWING HAVE BEEN PLOTTED FROM THE BEST AVAILABLE INFORMATION. IT IS HOWEVER THE RESPONSIBILITY OF THE CONTRACTOR TO FIELD VERIFY THE LOCATION OF ALL UTILITIES PRIOR TO THE COMMENCEMENT OF ANY CONSTRUCTION ACTIVITIES.

811 Know what's below. Call before you dig.
CALL 811 SEVENTY-TWO HOURS PRIOR TO DIGGING, GRADING OR EXCAVATING FOR THE MARKING OF UNDERGROUND MEMBER UTILITIES

REV. NO.	DATE	REVISIONS DESCRIPTION

REVISIONS

BIRD NETTING LAYOUT PLAN

AXIA ENERGY COMPLETION PIT
MOFFAT COUNTY, COLORADO

CRAIG, COLORADO

2012

drawn by:	MEO
checked by:	WEP
approved by:	WEP
QA/QC by:	LP
project no.:	012-1222
drawing no.:	
date:	06.22.2012

SHEET
9

DWG: F:\Projects\012-1222_WTRS\Final_Plans\121222_NET.dwg USER: cuhrich
DATE: Jul 11, 2012 8:37am XREFS: 121222_XBASE 121222_PBASE 121222_BRDR